92112900

ROUGH COUNTRY
SUSPENSION SYSTEMS®

97-06 JEEP TJ DISCONNECT KIT FOR 2 1/2” LIFT

Thank you for choosing Rough Country for your suspension needs.

Rough Country recommends a certified technician installs this system. In addition to these instructions, professional knowledge of disassemble/reassembly procedures as well as post installation checks must be known. Attempts to install this system without this knowledge and expertise may jeopardize the integrity and/or operating safety of the vehicle.

Please read all the instructions before beginning the installation. Check the kit hardware against the kit contents. Be sure you have all the needed parts and understand where they go. Also please review the tools needed list and make sure you have needed tools. If you have any questions please call us at 800-222-7023.

⚠NOTICE **NOTICE TO DEALER AND VECHICLE OWNER**

Any vehicle equipped with any Rough country product must have the “Warning to Driver” decal installed on the sun visor or dash. The decal is to act as a constant reminder for whoever is operating the vehicle of its unique handling characteristics. **INSTALLING DEALER**—It is your responsibility to install the warning decal and to forward these installation instructions on to the vehicle owner for review and to be kept in the vehicle for its service life.

⚠WARNING Sway bar should only be disconnected during off road use. Do not exceed 15mph with sway bar disconnected.

KIT CONTENTS

Disconnect Link w/bushing (2)
Pass Frame Bracket (1)
Driver Frame Bracket (1)
Sway Bar Disconnect Bag
- 4-1/4” x 3/4” Bolts
- 4-1/4” Flat Washers
- 2-3/8” x 1 1/4” Bolts (not shown)
- 2-3/8” Flat Washers (not shown)
- 3-3/8” Lock Washers (not shown)
- 2-Disconnect Pins
- 2-Hitch pins
- 2-Rod Ends
- 2-1/2” Nuts
- 2-1/2” Flat Washer
- 2-1/2” Flange Lock Nut
- 2-1/2” Jam Nut

TOOLS NEEDED:

7/16” Socket / Wrench
9/16” Socket / Wrench
3/4” Socket / Wrench
18mm Socket / Wrench
19mm Socket / Wrench

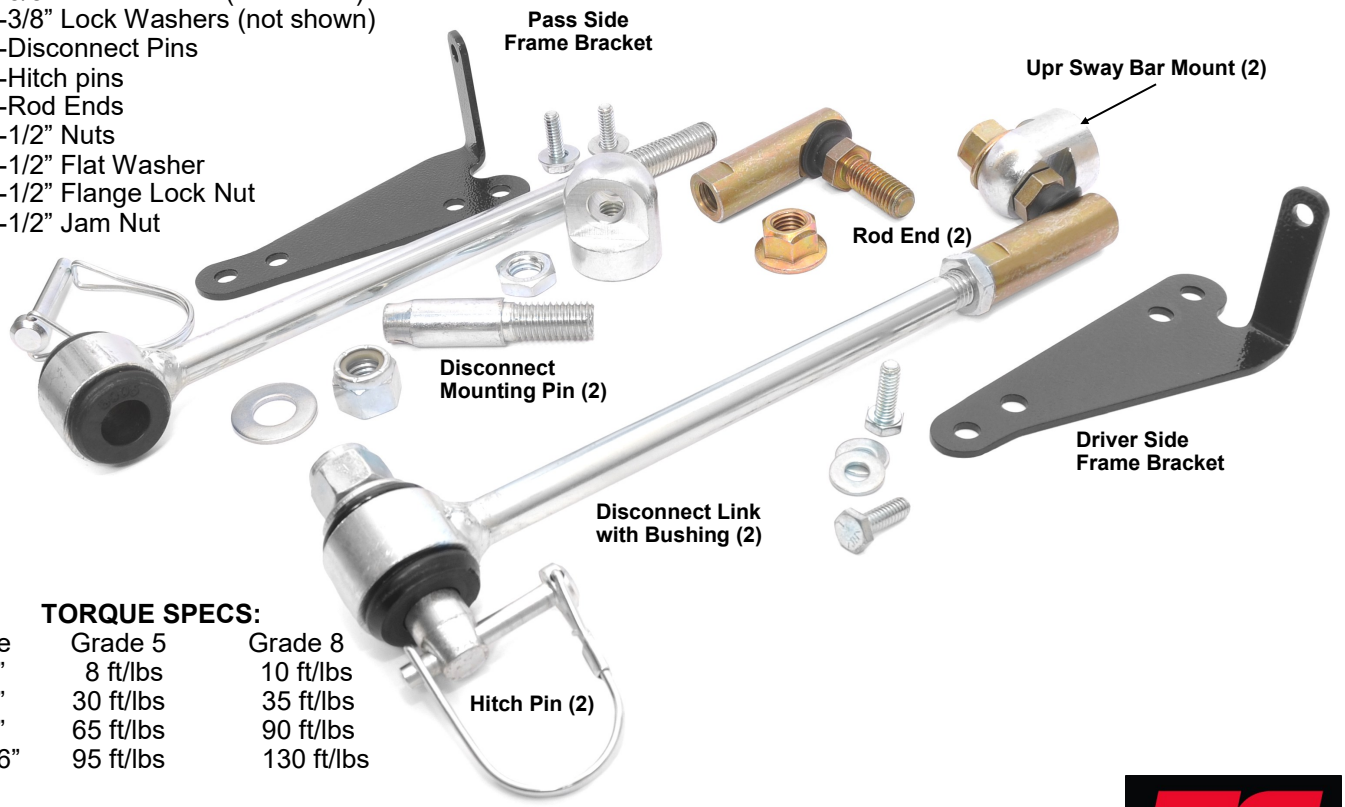

TORQUE SPECS:

Size	Grade 5	Grade 8
1/4”	8 ft/lbs	10 ft/lbs
3/8”	30 ft/lbs	35 ft/lbs
1/2”	65 ft/lbs	90 ft/lbs
9/16”	95 ft/lbs	130 ft/lbs

INSTALLATION INSTRUCTIONS

1. Install the upper sway bar mount on the top of front sway bar where the stock link was secured, using the supplied 3/8” x 1.25” bolt, lock washer, and washer**.** Tighten using a 9/16” wrench making sure the mount is straight. Note that washer will conform to sway bar surface and be pulled in. **See Photo 1.**
2. Assemble the sway bar link with the link body, the jam nut and rod end Adjust the sway bar to a length of **10 1/4”** from top to bottom. Tighten the jam nut against the rod end using a 5/8” & 3/4”wrench.
3. Install the link on the upper sway bar mount with the supplied 1/2” lock nut as shown in **Photo 2**. Tighten using a 5/8” & 3/4” wrench.

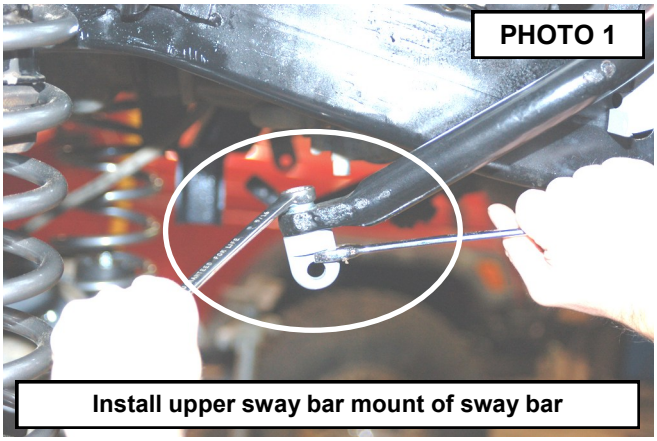

Install upper sway bar mount of sway bar

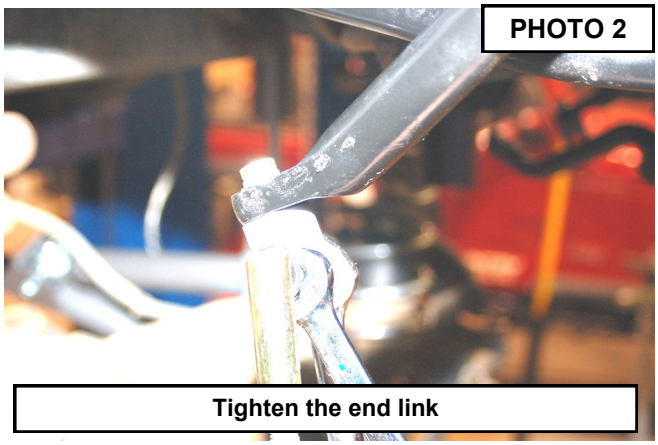

Tighten the end link

4. Install the supplied pin on the axle as shown in **Photo 3**. Tighten using a 3/4” wrench.
5. Remove the bolts securing the plastic shroud to the frame and install the driver and passenger side frame mount brackets in the holes shown for the 2 1/2” disconnect kit using the factory holes and the supplied 1/4” x 3/4” bolts & washers. **See Photo 4.** Tighten using a 7/16” wrench, be careful to not over tighten. **Please note there is a passenger and driver side bracket**.

Install mounting pin on axle

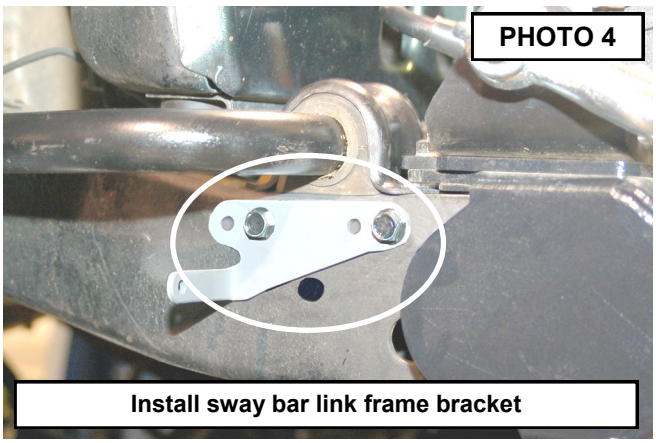

Install sway bar link frame bracket

6. Swing the sway bar link down and install on the lower axle mounting pin. Install the disconnect pin. **See Photo 5. It may be necessary to install the link on the axle after the vehicle is on the ground.**
7. When disconnecting the sway bar, remove the sway bar link and place it on the frame mount as shown in **Photo 6** to keep the sway bar link from interfering with front end components.

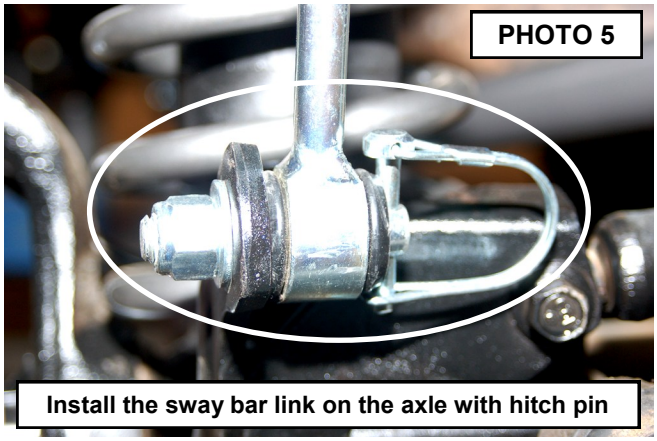

Install the sway bar link on the axle with hitch pin

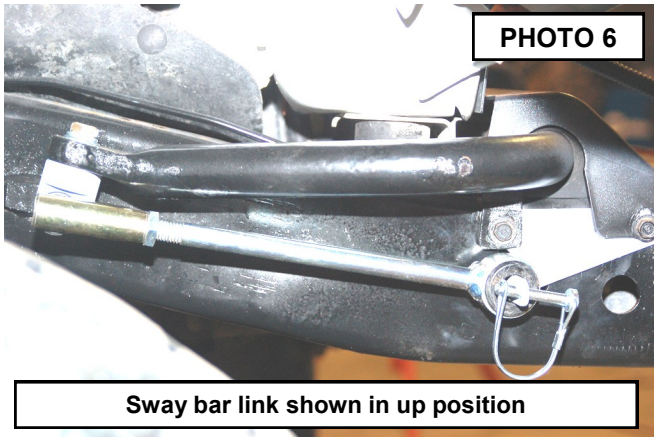

Sway bar link shown in up position

POST INSTALLATION

- All components must be retightened after 500 miles, and every three thousand miles after installation.